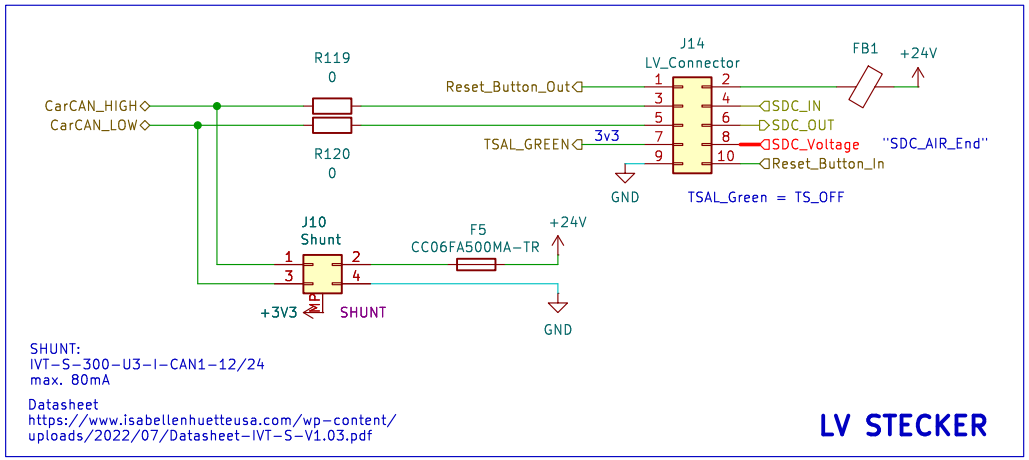

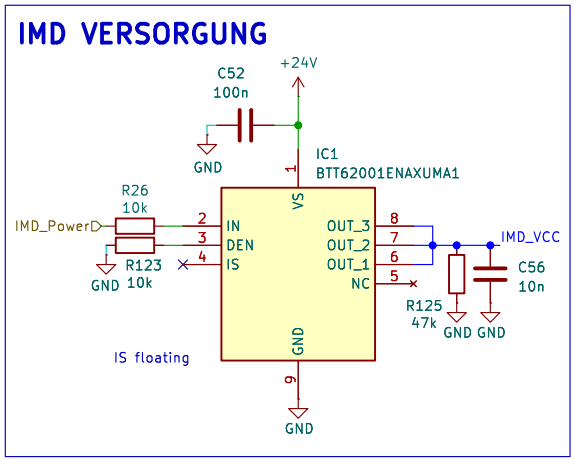

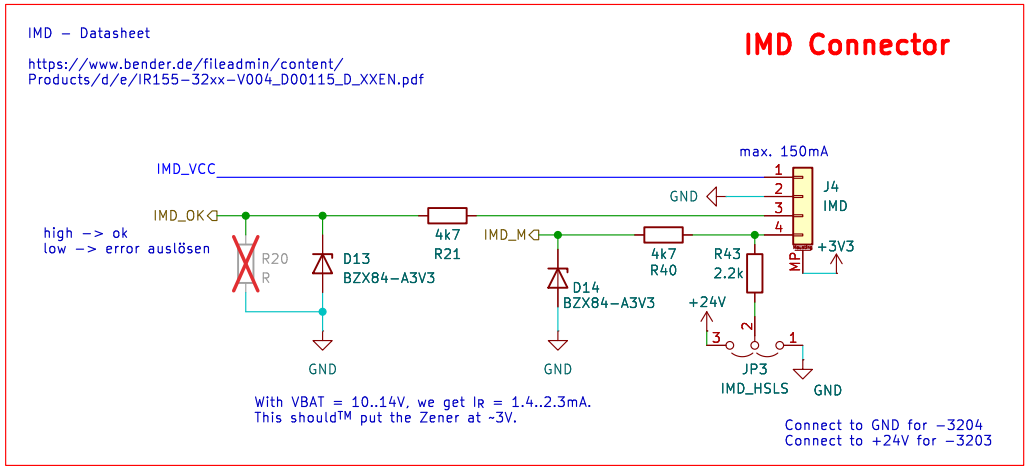

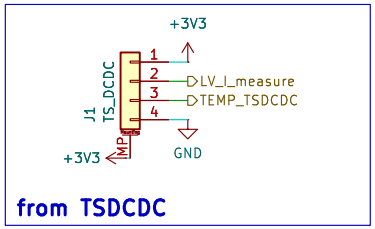

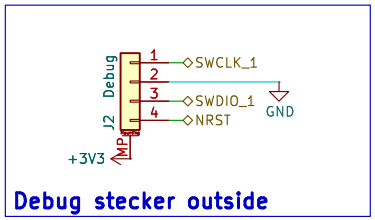

FASTTUBE

Project:Master_FT25	Rev: V1
	Date: 2025-03-01
Title: Inputs and Outputs	Exp. Date: 2025-04-26
Author: Lene Marquardt	Size: A4 Page: 12/15