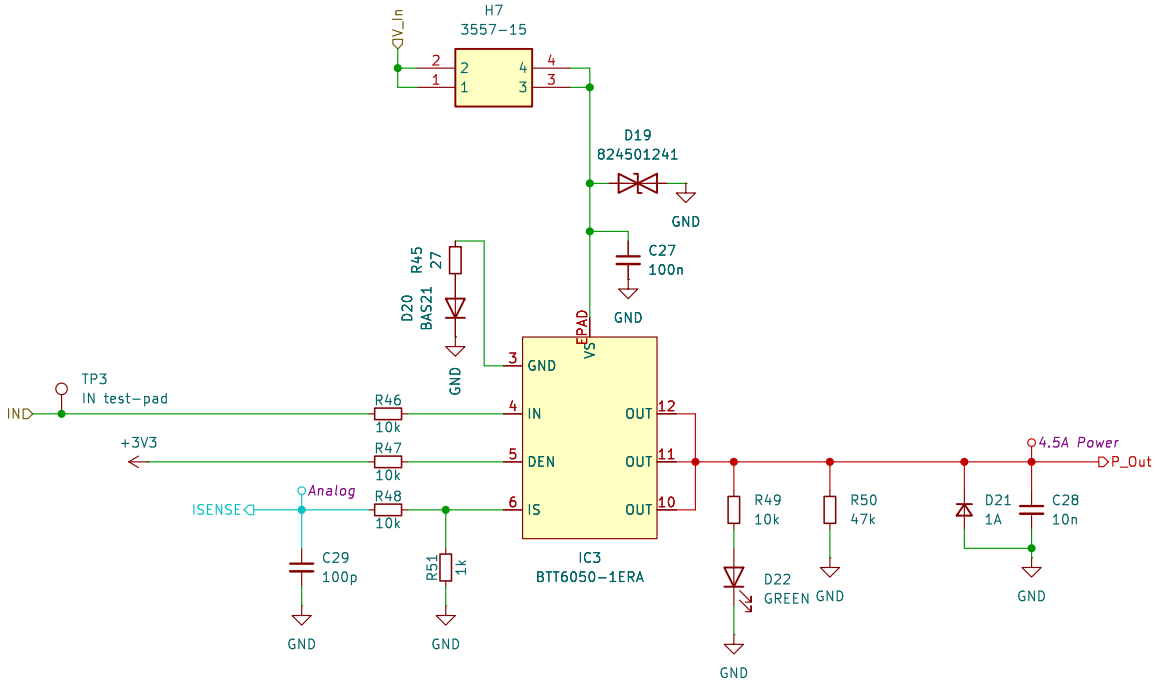

FASTTUBE

Title: SDC	**Rev: V1.2**
	Date: 2025-01-15
Project: FT25_PDU	Exp. Date: 2025-05-01
Author: Janek Herm	Size: A4 | Page: 7/23