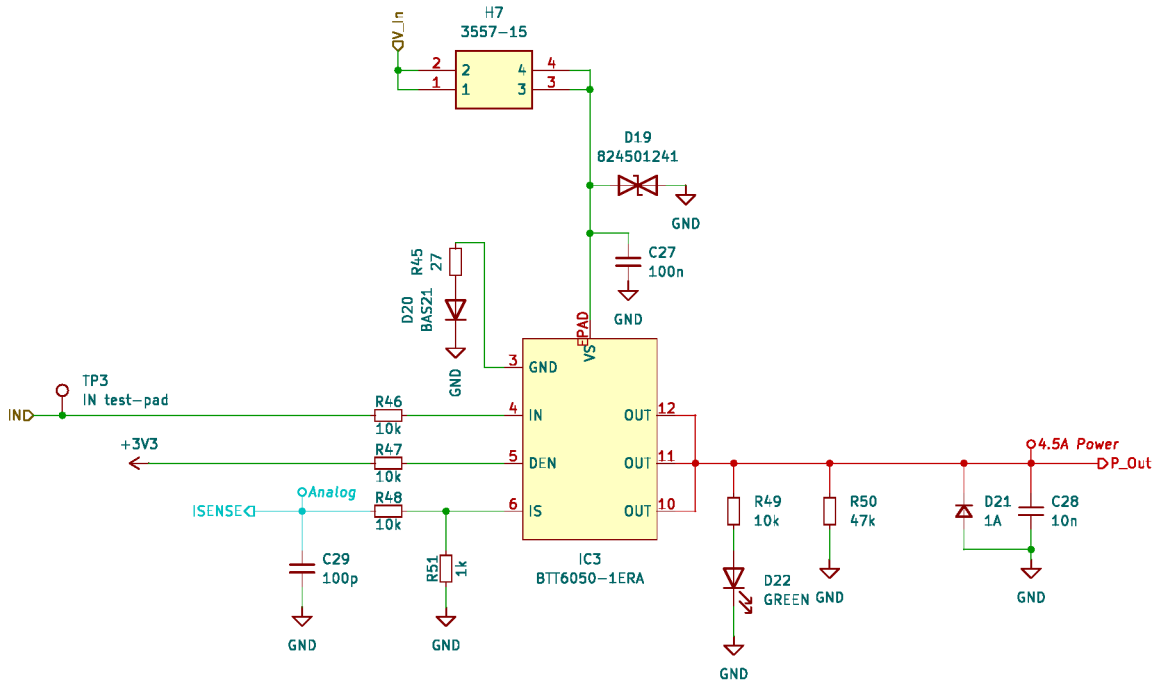

FaSTTUBe

Title: PDU FT25	Rev: V1.2
	Date: 2025-01-15
Project: FT25_PDU	Exp. Date: 2025-04-28
Author: FaSTTUBe Electronics	Size: A4 Page: 7/23